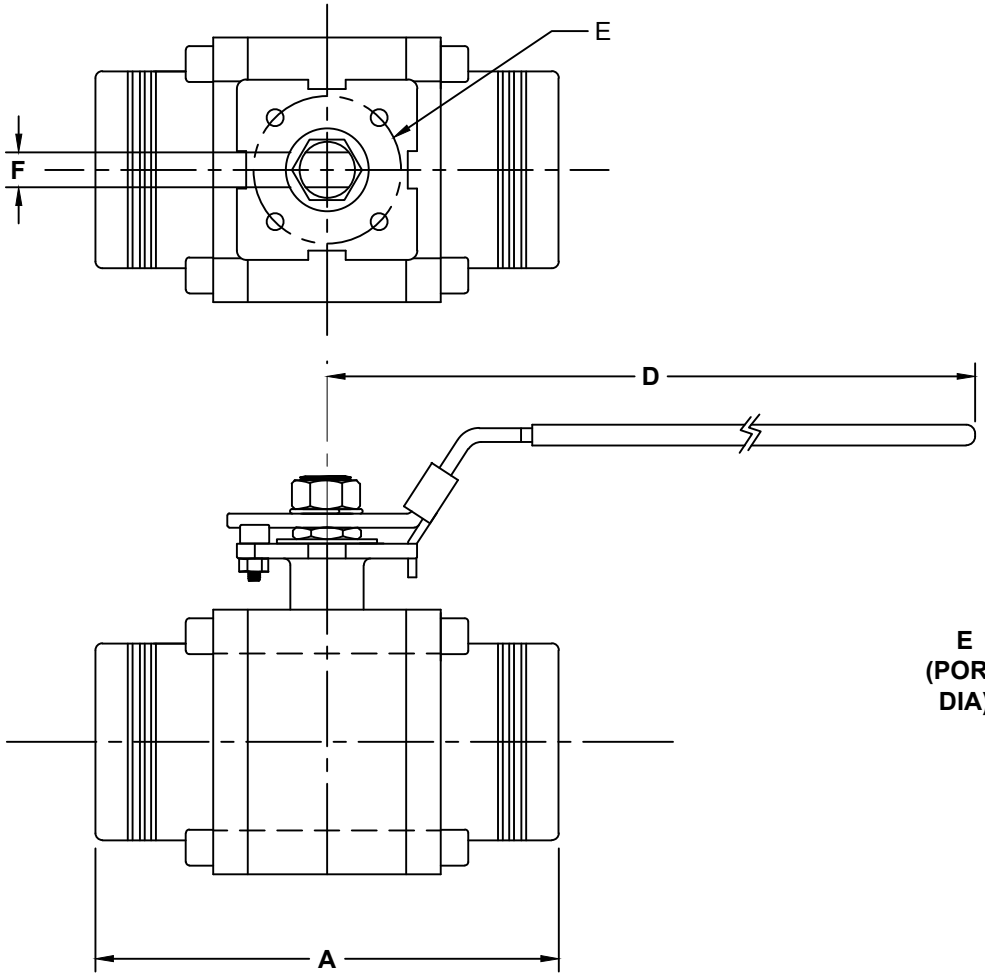

VALVE NOTES:

MATERIALS:
- *BODY, BALL AND CAP: ASTM A351 CF8M*
- *STEM: 316 SS*
- *SEAT:REINFOCED TEFLON*

SPECIFICATIONS:
- *ASME/ANSI B16.11 COMPLIANT*
- *FIRE SAFE TO API607-4*
- *ASME/ANSI B16 CLASS 600*
- *NACE MRO175*
- *FEDERAL SPECIFICATION WW-V-35C*
- *TESTED API-598*
- *25Hg-3000 PSI WOG COLD NON-SHOCK(1/4" thru 3/4")*
- *25Hg-2250 PSI WOG COLD NON-SHOCK(1" thru 3")*
- *VALVES CAN BE ACTUATED, REFER TO CATALOG FOR MOUNTING KIT OR CALL FACTORY*

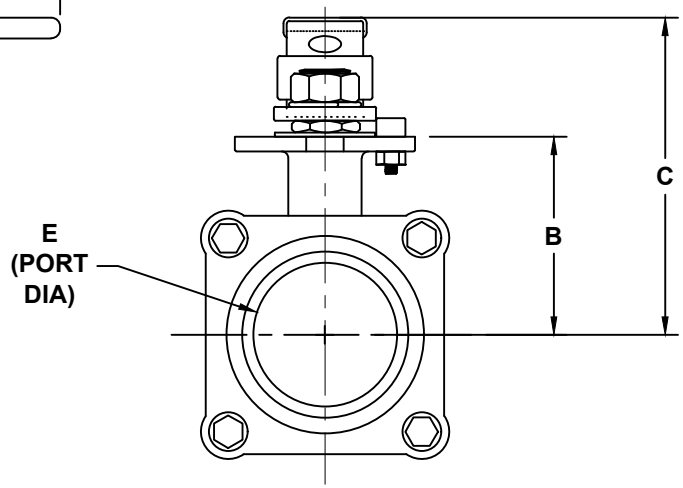

CONNECTION OPTIONS

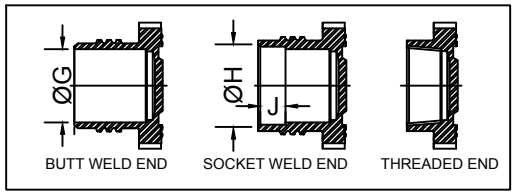

STAINLESS STEEL/CARBON STEEL S2F22 SOCKET WELD & NPT 2 WAY VALVES												
SIZE	A (NPT)	A (BW&S)	B	C	D	E	F	G (SCH 80)	H	J	Cv	TORQUE (In-lb)
1/4"	2.72	4.81	1.54	2.69	6.30	F04	0.25	0.30	0.56	0.41	19	75
3/8"	2.72	4.81	1.54	2.69	6.30	F04	0.25	0.42	0.69	0.41	19	75
1/2"	2.91	4.89	1.54	2.69	6.30	F04	0.25	0.55	0.85	0.43	18	85
3/4"	3.39	5.17	1.70	2.85	6.30	F04	0.25	0.74	1.07	0.47	42	140
1"	3.70	5.24	2.06	3.44	6.89	F05	0.32	0.96	1.33	0.49	72	190
1 1/4"	4.09	5.72	2.19	3.57	6.89	F05	0.32	1.28	1.67	0.59	124	320
1 1/2"	4.61	6.19	2.65	4.24	8.66	F07	0.37	1.50	1.91	0.67	210	430
2"	5.20	6.62	2.90	4.49	8.66	F07	0.37	1.94	2.41	0.71	350	560
2 1/2"	7.28	8.78	3.39	6.22	15.40	F10	0.63	2.32	2.91	0.98	650	950
3"	8.74	10.02	4.47	6.54	15.40	F10	1.10	2.90	3.54	0.98	950	1200

THIS DOCUMENT IS PROPERTY OF UNIVERSAL COMPONENTS, INC.
ANY REPRODUCTION, DISCLOSURE, OR USE OF THIS DOCUMENT IS
EXPRESSLY PROHIBITED UNLESS OTHERWISE AGREED UPON IN WRITING.
ALL SPECIFICATIONS SUBJECT TO CHANGE WITHOUT NOTICE.

CONSULT ORDERING MATRIX FOR OPTIONS AND MATERIALS

DRAWING NAME:
STAINLESS STEEL /CARBON STEEL FULL PORT SOCKET WELD & NPT 2250 PSIG 3-PIECE VALVES

MATERIAL:	A	DRAWING NUMBER: S3F22-C3F22-SERIES	REV. 2
SCALE: N.T.S.	NAME: MCH	DATE: 8-9-19	